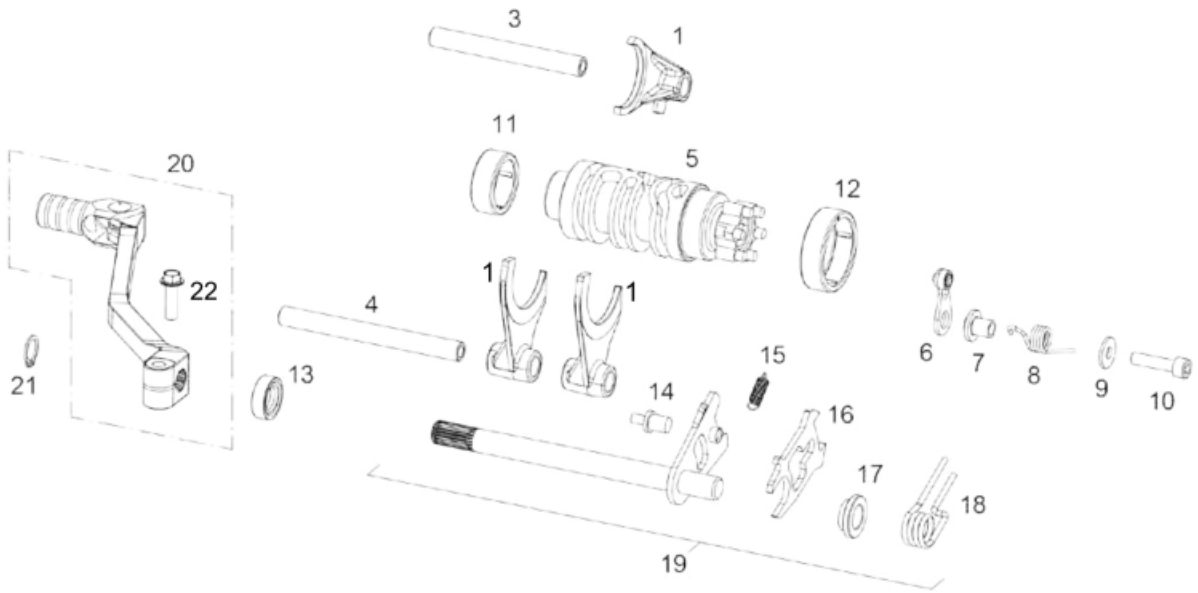

1	OBSOLETE : 0/005.330.9100 : (RIEJU) PRIMARY AND SECONDARY FORKS KIT ME47000CT-CLJ-1 (u. 1)
3	RJ-MR SHORT FORK SHAFT : ME25636045 0/000.190.9107 (u. 1)
4	RJ-MR LONG FORK SHAFT : ME25636044 0/000.190.9106 (u. 1)
5	RJ-MR SHIFT CAM : ME250036031, ME25836031 : ME250536031 0/005.090.9100 (u. 1)
6	RJ-SHIFT STOP CAM {GASGAS/RIEJU} : ME250036033 : ME250036033CT 0/005.560.9100 (u. 1)
7	RJ-MR GEAR BUSHING : ME25636047 0/000.480.9122 (u. 1)
8	RJ-MR GEAR STOP SPRING : ME250036034 0/000.470.9108 (u. 1)
9	WASHER 6x16x1.5 : T4006016 0/000.440.9125 (u. 1)
10	FLANGE BOLT 6x25 10.9 : T0206025/2 : T0206025 0/000.460.9121 (u. 1)
11	RJ-MR SHIFT CAM BEARING : M03645000 : ME25636055 0/000.960.9111 (u. 1)
12	RJ-MR SHIFT CAM BEARING : M03650000 : ME25636054 0/000.960.9110 (u. 1)
13	RJ-MR SEAL 12x22x7 : M03821000 : ME25636048 0/000.890.9107 (u. 1)
14	RJ-MR SELECTOR SPRING SCREW : ME25636042 0/000.460.9110 (u. 2)
15	(ENDURO) SHIFT RATCHET SPRING ME25636039 (u. 1)
16	(ENDURO) SHIFT RATCHET ME250236036 (u. 1)
17	(ENDURO) SHIFT CENTER BUSHING (250cc) (2004-2019) : ME25636041 ME250236041 (u. 1)
18	RJ-SHIFT SHAFT SELECTOR SPRING ME25636035 (u. 1)
19	RJ-MR SHIFT SHAFT ASSEMBLY : ME250236038, ME25636038 : ME250236038CT 0/005.010.9100 (u. 1)

20	OBSOLETE : 0/005.430.9104 : RJ-MR SHIFTER KIT : ME49000CT-CDH-1 0/005.430.9100 (u. 1)
21	RJ-MR SNAP RING 12x1 : ME25636043 0/000.300.9104 (u. 1)
22	HEX BOLT 6x20 10.9 : T0206020/2, T0206020/3 : T0206020 0/000.460.9120 (u. 1)